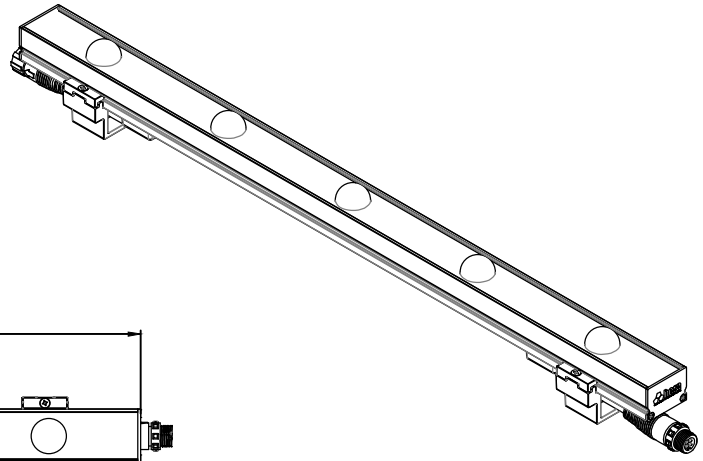

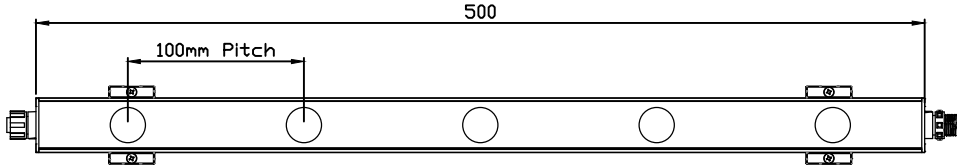

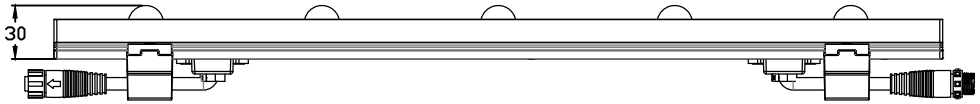

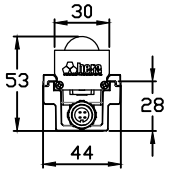

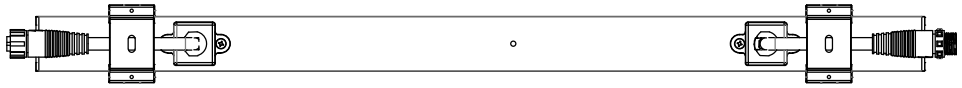

entertainment & architecture lighting
HERA LED AYDINLATMA SAN. TIC. A.S
Gülbağcılar mah. Kahramanlar Cad.
No:3-1 34306 Yenidoğ/İstanbul/Turkey
T : +90 216 387 79 00 F : +90 216 387 79 02
www.heraled.com / info@heraled.com

Product :
P01083085 Sword 100x1-RGB 50cm Dome 15Ch. 5 Pixel

Drawn	Date	Size	Dwg. No. :	Rev.
Erkan Gülteki	Sep.01.15	A2		V1.0

SCAL. 1 : 1 CAD FILE : DATE: 1 of 1